Owner's Manual

Chain Driven Live Roller Conveyor

© LEWCO, Inc. 2025
706 Lane St. • Sandusky, Ohio 44870 USA
Phone: (419) 625-4014 • Fax: (419) 625-1247
conveyorsales@lewcoinc.com • www.lewcoinc.com

Revised 1/1/2025
ISO 9001 Certified

TABLE OF CONTENTS

WARRANTY…… 1

INTRODUCTION…….... 2

SECTION 1 – SAFETY……..……...…..... 3

1-1 SAFETY SIGNS & DEFINITIONS…….…… 3

1-2 SAFETY CONSIDERATIONS……..…….. 4

1-3 EMERGENCY SHUT-DOWN……..…….. 4

1-4 GUARDS & GUARDING…….. 5

SECTION 2 – INSTALLATION…...……..... 5

2-1 RECEIVING & INSPECTION……..…… 5

2-2 SUPPORT INSTALLATION……. 6

2-3 CONVEYOR SET-UP……... 6

2-4 CHAIN INSTALLATION – MULTIPLE SECTION CONVEYORS…….. 7

2-5 ELECTRICAL INSTALLATION & CONTROLS..……...……. 8

2-6 PRE-START CHECKS…….……..... 8

SECTION 3 – MAINTENANCE…… 9

3-1 MAINTENANCE INTERVALS...…….. 9

3-2 MAINTENANCE PROCEDURES……..... 10

3-3 REPLACEMENT PARTS..……..... 11

SECTION 4 – TROUBLESHOOTING…… 14

LEWCO, Inc.

Warranty

Conveyor Products

1. LEWCO, Inc.'s warranty becomes null and void if payment in full is not received for goods and services.
2. Unless separately agreed to otherwise, warranty is for 1 year or 4200 hours, whichever comes first, free from defects by faulty material or workmanship, effective from Buyer's receipt of goods and services.
3. LEWCO, Inc. will replace, F.O.B. Sandusky Ohio, or repair equipment proving defective in material and workmanship. Defective parts need to be shipped back to LEWCO, Inc. for inspection at Buyers cost.
4. Failure due to abuse, overloading, maintenance neglect, exposure to corrosive or abrasive materials, operation under any degree of dampness, or improper use shall not be subject to this warranty.
5. Any modification to equipment or systems without LEWCO, Inc.'s written consent voids this warranty.
6. Component parts not of LEWCO, Inc.'s manufacture will be covered by the original manufacturer's warranty and not LEWCO, Inc.'s. In this case, contact the nearest authorized service representative of the manufacturer.
7. Standard warranty does not include labor to remove and/or install defective equipment.
8. If LEWCO, Inc.'s service is required for additional assistance, contact our customer service department; labor will be charged at prevailing rate plus travel expenses.
9. LEWCO, Inc. shall not be liable for loss of profits, delays or expenses incurred by failure of said parts, whether incidental or consequential.
10. LEWCO, Inc. shall not be liable for failure of the goods to comply with federal, state or local laws.
11. See LEWCO, Inc.'s GENERAL TERMS AND CONDITIONS for additional warranty detail.

INTRODUCTION

Thank you for choosing LEWCO, Inc. for your material handling needs. This manual has been prepared by LEWCO engineers for use in familiarizing personnel with the design, installation, operation and maintenance of LEWCO Conveyor Products. Information presented herein should be given careful consideration to assure safe, optimum performance of the equipment. Manual should always be accessible to the operators for quick reference.

This equipment has been designed and manufactured in accordance with applicable National Codes and Standards in effect as of the date of manufacture. It is the responsibility of the end user to update equipment as necessary to comply with future code changes or revisions.

This manual should be used in conjunction with applicable drawing(s), data sheets, and component manufacturer's literature attached hereto that clarify specific features, installation, utility connections, operation, etc.

If you have any questions regarding this manual or the use of your LEWCO Conveyor Products, please contact us by phone at (419) 625-4014 ext. 4003 or by email at conveyorsales@lewcoinc.com.

***NOTE*:** The information in this manual is subject to change without notice and does not represent an obligation on the part of LEWCO, Inc. LEWCO does not assume any responsibility for any errors that may appear in this manual and under no circumstances will LEWCO be held liable for technical or editorial omissions made herein, nor for direct, indirect, special, incidental, or consequential damages resulting from the use or defect of this manual.

NOTICE: No installation or operation of this equipment should take place until this manual has been studied and understood by the person(s) responsible.

Copyright © 2025 by LEWCO, Inc.

All rights reserved. Reproduction or copying of this manual by any means, electronic or mechanical, including photocopying, recording, or information storage and retrieval systems is not permitted without the written permission of LEWCO, Inc.

SECTION 1 – SAFETY

To reduce the possibility of injury to personnel operating, or in the vicinity of LEWCO conveying equipment, safety signs are posted at potential hazard points on the equipment. Examine this equipment and become familiar with potential hazard areas. Additionally, instruct all personnel to heed these potential hazard areas.

1-1 SAFETY SIGNS & DEFINITIONS

Manual Specific Safety Symbol Definitions	
	Safety instruction where an electrical hazard is involved.
	Safety instruction where non-compliance would affect safety.
	Safety instruction relating to safe operation of the equipment (ATTENTION).
	Safety instruction where non-compliance could potentially result in a pinch point or a description of a known existing pinch point.
	Safety instruction where non-compliance could potentially result in a pinch point or a description of a known existing pinch point.
DANGER	Indicates a hazardous situation which, if not avoided, will result in death or serious injury. The signal word "DANGER" is to be limited to the most extreme situations. DANGER [signs] should not be used for property damage hazards unless personal injury risk appropriate to these levels is also involved.
WARNING	Indicates a hazardous situation which, if not avoided, could result in death or serious injury. WARNING [signs] should not be used for property damage hazards unless personal injury risk appropriate to this level is also involved.
CAUTION	Indicates a hazardous situation which, if not avoided, could result in minor or moderate injury. CAUTION [signs] without a safety alert symbol may be used to alert against unsafe practices that can result in property damage only.
NOTICE	Is used to describe preferred to address practices not related to personal injury.
Equipment Specific Safety Signs & Definitions	
	DANGER: Climbing, sitting, walking or riding on conveyor at any time will cause severe injury or death. Keep Off.
	WARNING: servicing moving or energized equipment can cause severe injury. LOCK OUT POWER before servicing.
	WARNING: exposed moving parts can cause severe injury. LOCK OUT POWER before removing guard.
	WARNING: Moving equipment may cause severe injury. Keep Away.
	WARNING: Potential arc flash hazard.

1-2SAFETY CONSIDERATIONS

WARNING

- Disconnect and lockout electrical power and all other sources of energy before performing maintenance. Follow proper lockout/ tag out procedures. Know where arc flash is possible and take proper precautions.

- Do not have long hair, jewelry, or loose clothing while operating or near the conveyor, as these are potential hazards that could cause entanglement.
- Do not operate equipment without proper guards in place, as bodily injury may result.

- Pinch points may exist. Inspect equipment for potential pinch points and use caution.

CAUTION

- This equipment is to be operated by trained personnel only. Operators should be trained under normal and emergency conditions.
- Personnel operating or near the conveyor should be instructed as to the location of stopping devices. Ensure stopping devices are kept free of obstruction.
- Personnel operating or near the conveyor should watch for and be aware of conveying hazards, such as sharp edges, protruding parts, etc.
- Ridding on conveyor is strictly prohibited, as serious injury may result.
- Prior to starting conveyor, ensure no work is being performed, all guards are in place, and inspect for foreign objects that could injure personnel or damage equipment.
- Operators should always alert personnel in the area prior to starting the conveyor.
- This equipment may create hazards. The owner is responsible for analyzing the installation of this equipment in order to make determinations regarding the posting of warning signs in order to comply with applicable OSHA standards.
- Conveyor should only be used to transport materials or items that it is originally intended and designed to handle.
- Do not load conveyor beyond its designed handling capacity.
- Keep area around loading and unloading points of conveyor free from obstructions.
- After starting conveyor, make sure all areas of the conveyor are operating properly.
- Poor housekeeping practices can cause accidents. Keep conveyor and surrounding area clean from spilled lubrications and other materials.
- Always use extreme caution when using mechanical aids, such as hoists, cables, and other equipment to install or perform maintenance on conveyor. They can cause damage to the conveyor and cause a dangerous condition when the conveyor is turned on.

1-3 EMERGENCY SHUT-DOWN

In the event of an emergency, the following steps should be followed:

1. Stop the conveyor immediately by pressing the nearest emergency stop button or pulling the emergency stop cable. If access to emergency stop button or cable is restricted, or emergency stop devices were not provided, turn off the electrical disconnect providing power to the conveyor.
2. Depending on the severity of the issue, restrict access to the area until the issue has been resolved.

3. Before restarting the conveyor, inspect the equipment and determine the cause of the emergency shutdown. Disconnect and lock out all applicable energy sources before attempting to correct the issue, following proper lockout/tagout procedures.
4. Once the issue has been resolved and the conveyor is safe to operate, restore power and restart the conveyor using the designated controls. If equipped with an emergency stop device, it must be manually reset before restarting the conveyor.

1-4 GUARDS & GUARDING

All LEWCO standard conveyor equipment is equipped with standard machine guarding methods. It is the responsibility of the owner, however, to ensure that proper guarding methods are present to comply with OSHA Standards – 29 CFR – 1910.212 Machinery and Machine Guarding. Special consideration should be given to areas where multiple pieces of equipment interface. The following links are provided for reference:

1910.212(a): ***Machine guarding.***

1910.212(a)(1): ***Types of guarding***. One or more methods of machine guarding shall be provided to protect the operator and other employees in the machine area from hazards such as those created by point of operation, ingoing nip points, rotating parts, flying chips and sparks. Examples of guarding methods are barrier guards, two-hand tripping devices, electronic safety devices, etc.

1910.212(a)(2): ***General requirements for machine guards***. Guards shall be affixed to the machine where possible and secured elsewhere if for any reason attachment to the machine is not possible. The guard shall be such that it does not offer an accident hazard in itself.

1910.212(a)(3): ***Point of operation guarding.***

1910.212(a)(3)(i): Point of operation is the area on a machine where work is actually performed upon the material being processed.

1910.212(a)(3)(ii): The point of operation of machines, whose operation exposes an employee to injury, shall be guarded. The guarding device shall be in conformity with any appropriate standards thereof, or, in the absence of applicable specific standards, shall be so designed and constructed as to prevent the operator from having any part of his body in the danger zone during the operating cycle.

1910.212(a)(3)(iii): Special hand tools for placing and removing material shall be such as to permit easy handling of material without the operator placing a hand in the danger zone. Such tools shall not be in lieu of other guarding required by this section, but can only be used to supplement protection provided.

SECTION 2 – INSTALLATION

2-1 RECEIVING & INSPECTION

- Check the bill of lading against the items and item quantities received.
- Examine the equipment for damage.
  - Report bill of lading discrepancies or damage immediately to the vendor and carrier.
  - Obtain a signed damage report from the carrier and send a copy to the vendor.
  - **Do not attempt to modify or repair damaged equipment without authorization from vendor.**
  - Do not return equipment to the factory without a written return authorization. Returns without written authorization will not be accepted.
- Move all crates to area of installation.
- Remove crating.

- Remove shipping screws and guards and any accessory equipment that may be fastened to the conveyor.

2-2 SUPPORT INSTALLATION (if applicable)

- See *Figure 1*. Determine your desired conveying height (ELEVATION). Then measure from the bottom of the conveyor frame side rail to the top of roller (ROLLER HEIGHT). Subtract this measurement from the height you set the support to. Desired ELEVATION minus roller height equals support height.
- To adjust the support height, either screw or unscrew the jack bolt. This will raise or lower the support.
- Supports should be located at ends of conveyor and centered under each splice on multi-section conveyors (nominal 10Ft. centers). See *Figure 2*.

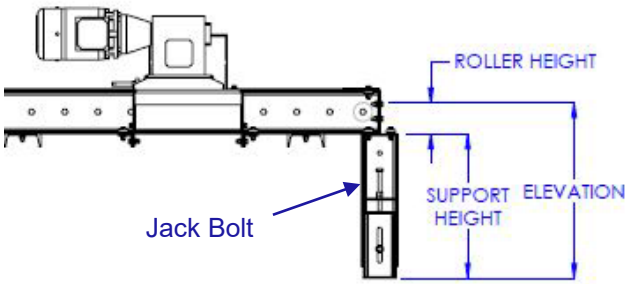

Figure 1 – Support Height Adjustment

- If supports are located on nominal 5Ft. centers, center additional supports midway between supports at splices. The guard cover for the drive may need to be removed so that the bolts to fasten the supports to the frame channel can be installed.
- Bolts for attaching the supports to the frame sections are shipped in a bag attached to the supports.

2-3 CONVEYOR SET-UP

- Mark a chalk line on floor based on desired location of conveyor.
- Place the drive section in the desired location.
- Depending on length of the conveyor, if additional extension sections are included, they should be installed according to the section number label. The section number label includes the Sales Order number, Order line-item number, and section assembly number (last two digits). See *Figure 2*. Conveyors made up of more than one section are to be assembled in ascending numerical order, starting with Section Assembly 01 at the product infeed end.
- Additional extension sections should typically be added equally on each end of the drive section, ensuring the drive section is in the middle of the overall conveyor length.

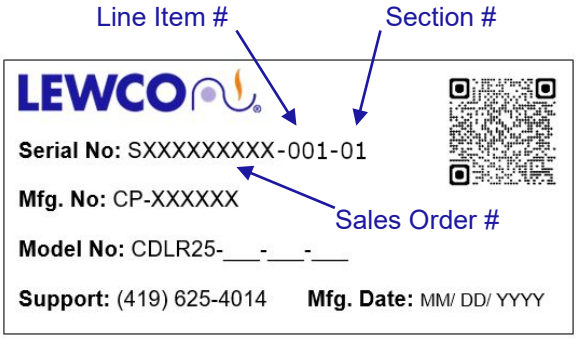

Figure 2 – Unit Label

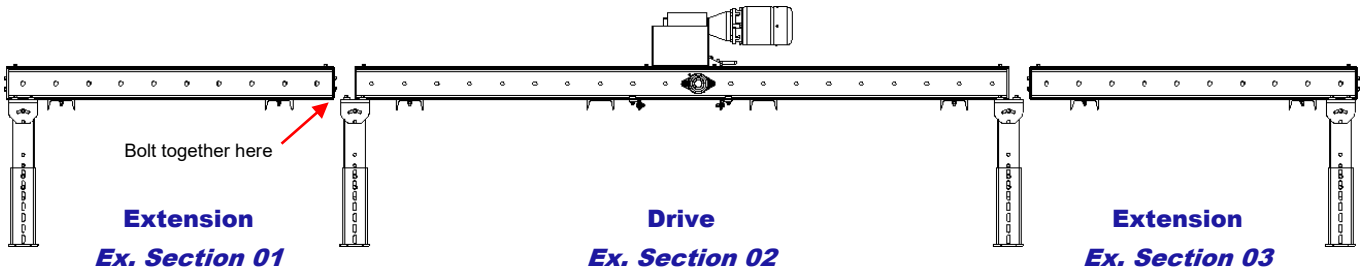

Figure 2.1 – Section Set-Up

- Depending on configuration, chain box end covers may ship loose. If this is the case, install the chain box cover at each end of the conveyor. See *Figure 3*.
- Bolt conveyor sections together at butt couplings.
- Check that conveyor is level across both width and length of conveyor. Adjust support height if necessary.
- Check all frame sections for square. See *Figures 4* and *5*. Use a string stretched from opposing corners at edge of frame to aid in straightening conveyor. Ensure that both dimensions are the same. Adjust or shim supports as required. Both sides of the conveyor must be in the same plane (frame not twisted).
- Tighten bolts at all butt couplings. Lag conveyor to floor.

Figure 3 – Chain Box End Cover (both ends)

Figure 4 – Check frame for square

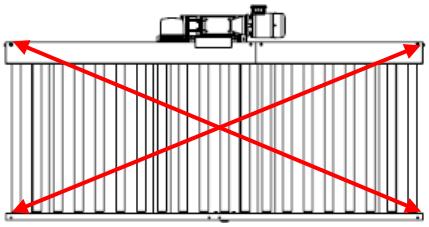

Must be equal.

Figure 5 – "Racked" Conveyor

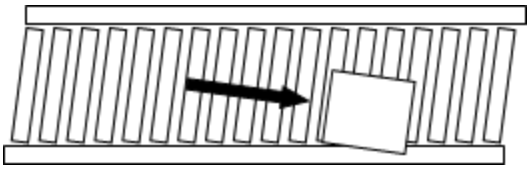

Rollers not square with frame.

2-4 CHAIN INSTALLATION – MULTIPLE SECTION CONVEYORS

On conveyors with multiple sections, a chain loop needs installed between the roller sprockets to drive the rollers in the added section. See *Figure 6.* A correct length loop of chain to connect the two sections together is supplied.

- To install the chain, remove the top cover of the chain box by unscrewing the nuts and bolts securing the cover to the frame rail.
- Open the chain loop by using plyers to remove the cotter pins from the chain's master link. See *Figure 7.*
- Once the chain is open, pass the chain around the adjacent empty sprocket. Reinstall the master link.

  NOTE: The chain loop will have very little slack, and the use of a chain tensioning tool may be required to install the master link.
- Chain loops will be installed in an alternating pattern as shown in *Figure 8.*
- After chain loops are installed, reconfirm that all rollers are square and level.
- Reinstall the chain box tops.

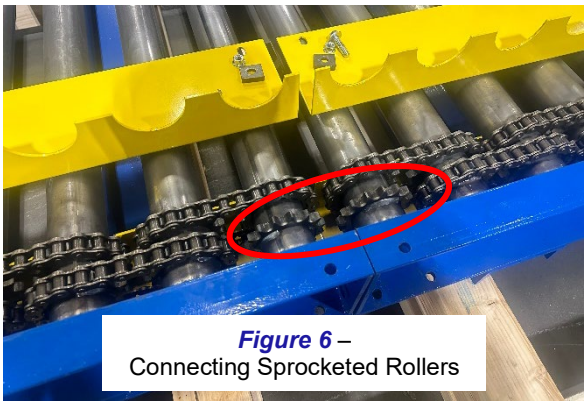

Figure 6 – Connecting Sprocketed Rollers

Figure 7 – Chain Loop Master Link

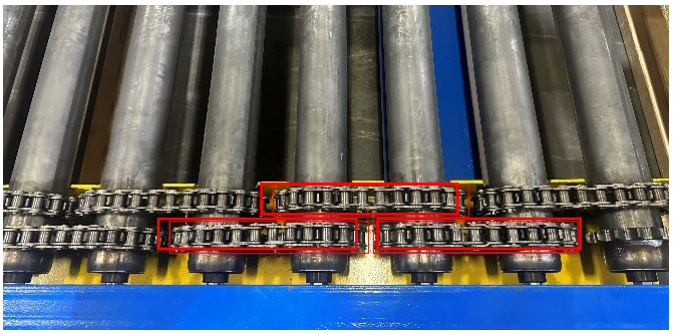

Figure 8 –
Alternating Chain Loops

2-5 ELECTRICAL INSTALLATION & CONTROLS

Electrical connections should be made by a qualified electrician in accordance with NFPA 70, “National Electric Code.” The installation must also meet the requirements of any applicable state and local codes.

- Control stations should be installed in a place where operation of equipment can be clearly seen.
- All controls must be labeled to indicate function.
- Any conveyor which could cause hazard or injury shall not be started until personnel in the conveying area are alerted by a warning signal or by a designated person that the conveyor is about to start. Further, when a conveyor automatically runs, or is controlled from a remote location, an audible warning signal that can be heard at all points along the conveyor must sound. The warning signal shall be initiated by the controller starting device and shall sound for a certain period of time before conveyor starts. In some cases, a flashing light or similar visual warning indicator may be used in conjunction with audible warning signal if it is deemed more effective.

NOTICE: When conveyor is not in use, the power source should be disconnected or turned off.

2-6 PRE-START CHECKS

- MOST speed reducers are shipped with oil, however, ALWAYS check for proper oil level before operating the conveyor.
- Remove drive chain guard and inspect drive chain and sprockets. Chain should have sag on the slack side per *Figure 9*. Measure the sag halfway between the two sprockets.
- Sag should be ¼” or 2% of the sprocket center distance.
- Inspect drive sprocket and set screws. These should be tight against the reducer and roller drive shaft. Using a straight edge check to assure the sprockets are aligned by placing the straight edge flush against the sprocket flanges.
- Re-install chain guard after inspection.

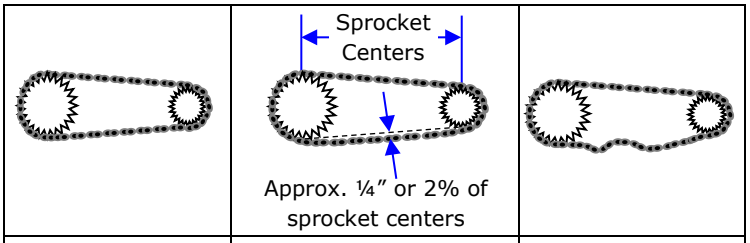

Figure 9 – Drive Chain Sag

SECTION 3 – MAINTENANCE

Effective operation and useful life of any equipment is directly related to the care and service it receives. A pre-determined maintenance schedule, including inspection, lubrication, and cleaning, should be established for each conveyor. Establish and maintain "Log Sheets" on each conveyor to record date and results of inspections, lubrication, and parts replacements. General inspections of all conveyors should be performed at regular intervals depending on use and service conditions.

WARNING: Do not attempt any maintenance on this equipment unless all sources of energy are disconnected and locked out by properly trained personnel.

NOTICE: Do not perform any work on the conveyor while it is running unless the nature of the maintenance absolutely requires operation of the conveyor. If the conveyor must be operated to perform maintenance procedures, allow only experienced conveyor maintenance personnel to do the work. Use extreme caution.

3-1 MAINTENANCE INTERVALS

This list of maintenance items is a general overview of the minimum items that may need to be addressed on your LEWCO Conveyor. The actual list may vary depending on the specific equipment provided. The customer should make the final determination on maintenance intervals and tasks to be performed while considering the working environment. Please review applicable component literature for further detail and potential additional maintenance items.

COMPONENT	ACTION	SCHEDULE		
		WEEKLY	MONTHLY	QUARTERLY
MOTOR	Listen for irregular noise.	✓		
	Check for overheat.	✓		
	Check mounting bolts are secure.		✓	
REDUCER	Listen for irregular noise.	✓		
	Check for overheat.		✓	
	Check oil level.			✓
DRIVE CHAIN	Check for tension.			✓
	Lubricate.	✓		
	Inspect for wear.			✓
SPROCKETS	Inspect for wear.			✓
	Check set screws and keys.			✓
BEARINGS	Listen for irregular noise.	✓		
	Check mounting bolts are secure.			✓
STRUCTURAL	General check: Loose nuts, bolts, etc. Tighten as necessary.		✓	
ELECTRICAL	Inspect all wiring for secure connection. Ensure there are no loose or cut wires.		✓	

3-2 MAINTENANCE PROCEDURES

3.2.1 Motor and Reducer

- Make sure the reducer is filled to the proper level with oil.
- Make sure vent plug (*Figure 11*) is clean and the orifice is open.
- Inspect reducer for leaks.
- Use only oil recommended by the reducer manufacturer when lubricating bearings.

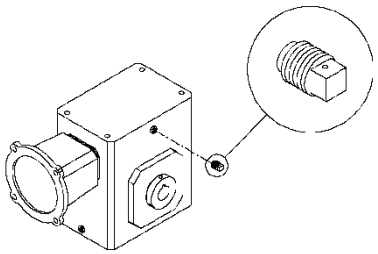

Figure 11 –
Reducer Vent Plug

3.2.2 Rollers and Bearings

- Check all rollers for tightness in frame.
- Lubricate all flange type bearings that have grease fittings. Use NLGI Grade 2 Lithium base grease, Shell Alvania EP2, or equal.
- Listen to bearing for excessive noise. Replace as required.
- To remove a roller, use a screwdriver (or similar object) to press in the spring-loaded hex axle on the sprocketed side of the roller. Use the screwdriver (or object) to push the axle in, and simultaneously use your hand to pull up on the roller to remove it from the frame. See *Figure 12*.

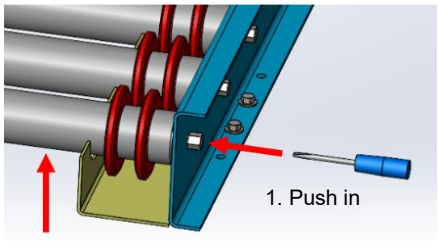

2. Lift up

Figure 12 –
Roller Removal

3.2.3 Sprocket and Chain Maintenance

- Remove drive chain guard and inspect drive chain and sprockets.
- Chain should have ¼" or 2% sag when measured on the lower run of chain halfway between the two sprockets. See *Figure 9* in Section 2-6, Pre-Start Checks.
- A loose chain can jump the drive sprockets and can cause sprocket wear and failure. A tight chain requires excessive motor power and can cause chain and sprocket failure. Adjust drive tension by first loosening the nuts on the drive mount, then turning the tensioning bolt or bolts shown in the applicable figure below based on drive location. Retighten the drive mount nuts once proper tension is achieved.

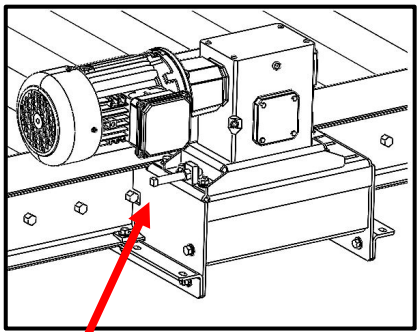

Figure 13.1 –
Drive Location: D32, Center Drive, Mounted High

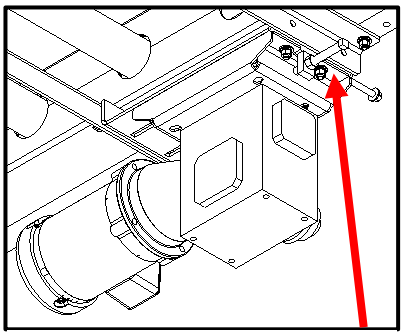

Figure 13.2 –
Drive Location: D33, Center Drive, Mounted Low

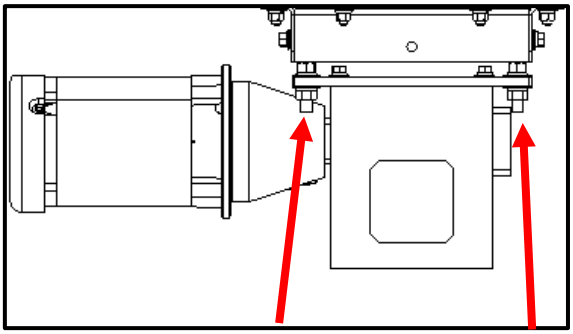

Figure 13.3 –
Drive Location: D34, Center Drive, Mounted Below & Within Frame

- Inspect drive sprocket and set screws for tightness against the reducer.
- Check sprocket alignment. Misalignment causes wear on one side of the sprocket. Check for a misaligned shaft or a sprocket off center.
- Check shaft bearing set screws.
- Lubricate the drive chain with SAE-30 oil approximately every 40 hours of operation. Lubricate more frequently under extreme ambient conditions. Rinse chain in solvent before lubricating.
- Re-install chain guard after inspection and maintenance.

3.2.4 Cleaning

- Periodically remove drive chains and clean by immersing in solvent and scrubbing with a wire brush. Rinse thoroughly, dry, and re-lubricate. Upon reinstalling, verify proper chain tension.
- Clean chain box and keep free of all debris.

3-3 REPLACEMENT PARTS

To order replacements parts, please contact your LEWCO distributor or integrator. If unable to contact distributor, please contact LEWCO's Customer Service Department by emailing *conveyorsales@lewcoinc.com* or by calling *419-625-4014, ext. 40003*. Please be prepared to provide both your MODEL and SERIAL NUMBER when ordering. Serial numbers can be found on unit labels. There is one unit label per each section of conveyor. See *Figure 14.*

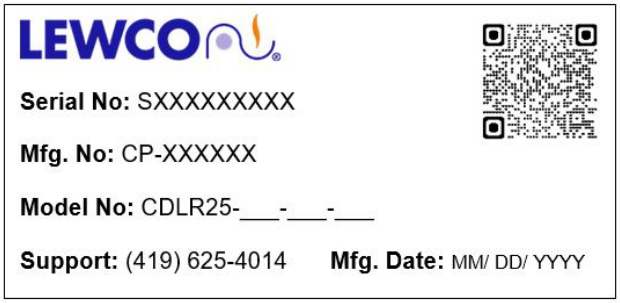

Figure 14 **– Unit Label**

Standard Conveyor Components, Model **CDLR**

Figure 15.1

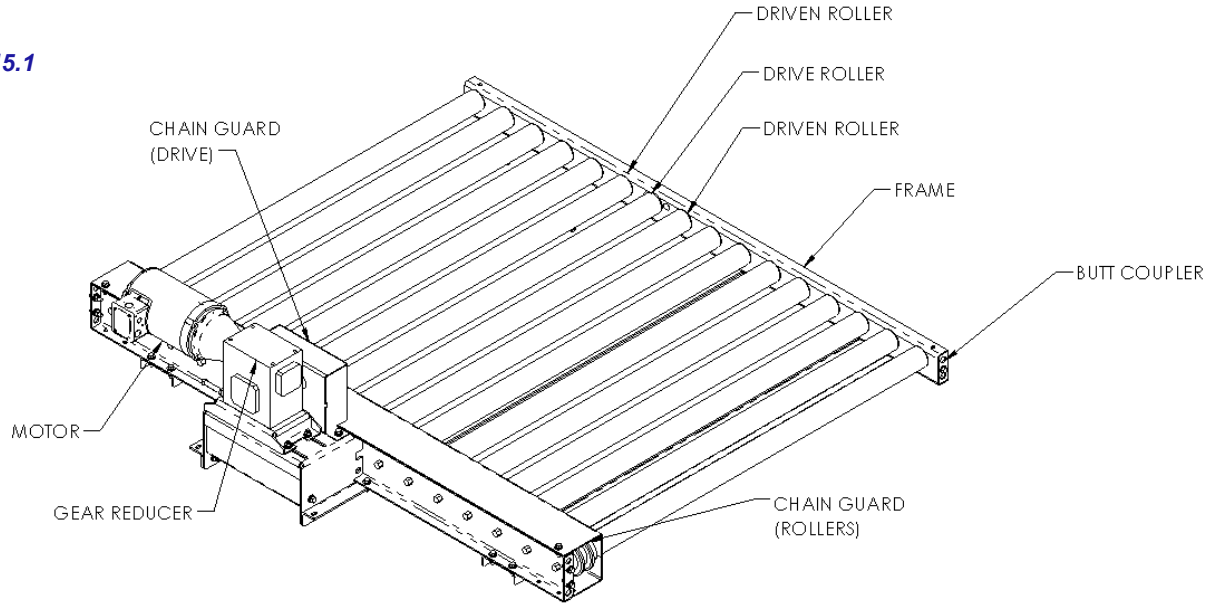

Figure 15.2

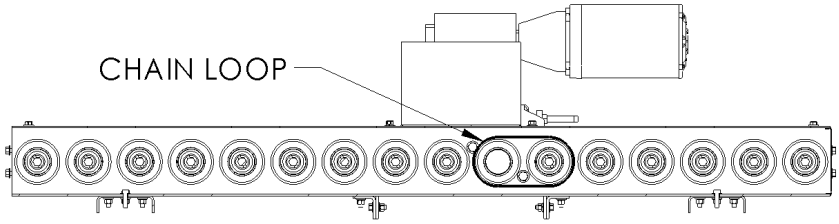

Figure 15.3

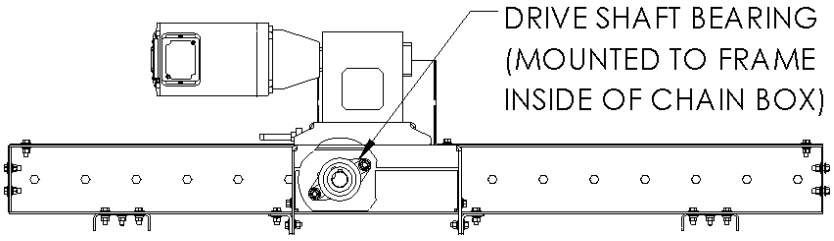

Figure 15.4

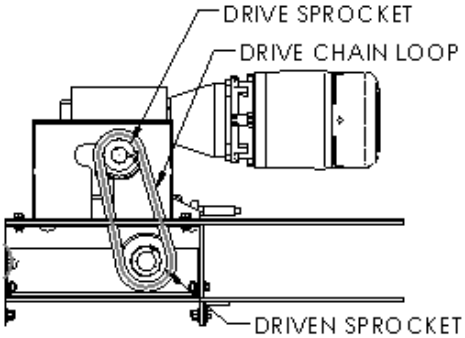

Standard Conveyor Components, Model **CDDB**

Figure 17.1

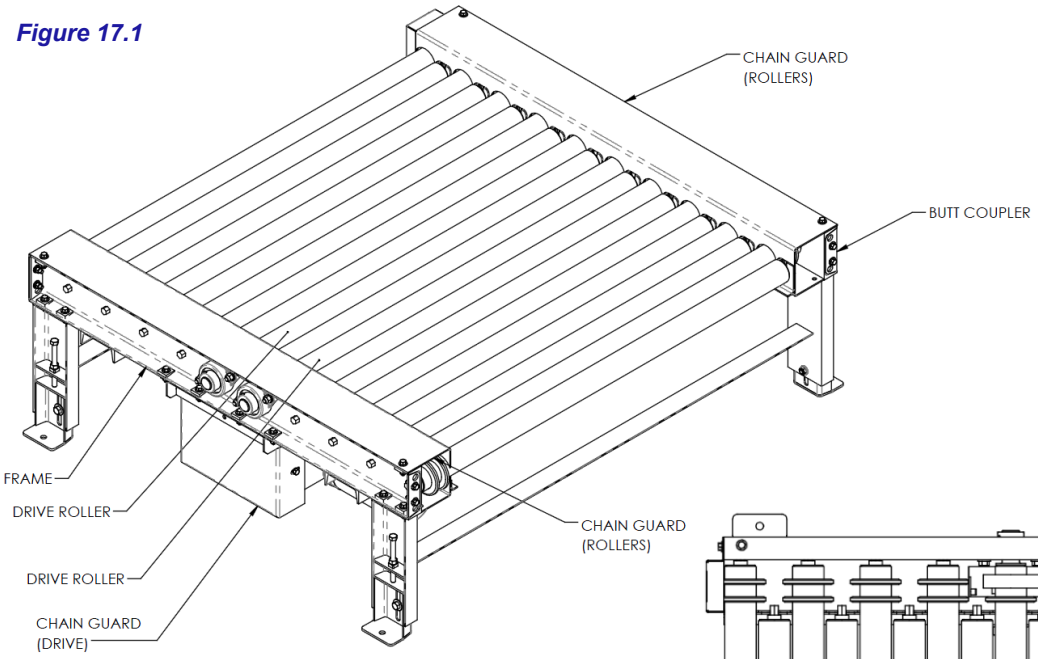

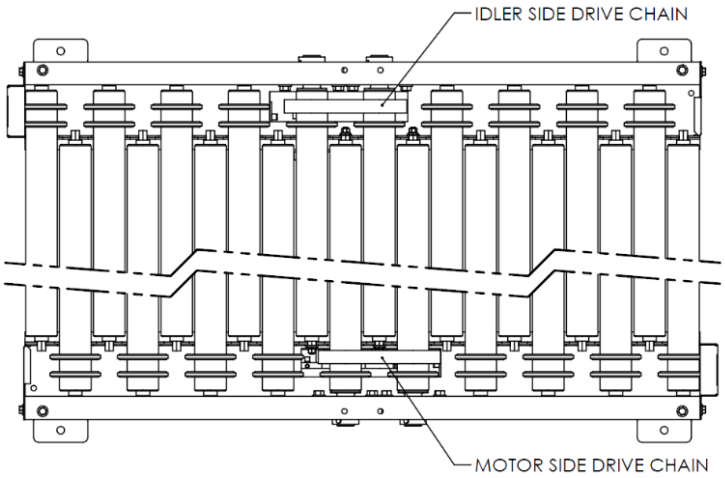

Figure 17.2

Figure 17.3

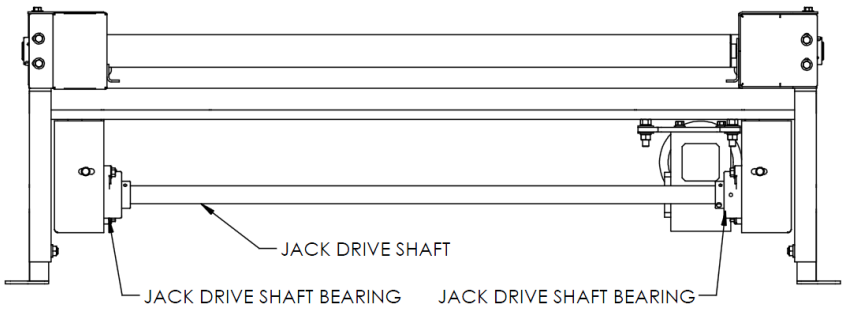

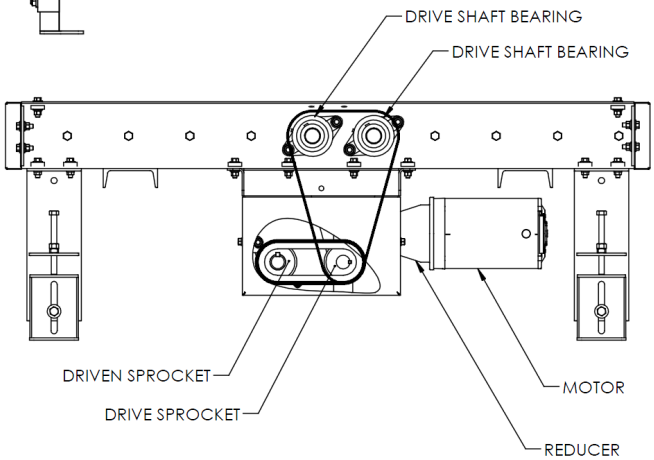

Figure 17.4

SECTION 4 – TROUBLESHOOTING

TROUBLE	CAUSE	SOLUTION
Conveyor does not start or motor stalls.	No power.	Ensure conveyor is plugged in to a source with power.
	Motor overloaded.	Check conveyor loading against design parameters.
Excessive wear on drive chain and/or sprockets.	Lack of lubrication.	Lubricate chain.
	Sprockets out of alignment.	Align sprockets.
	Loose drive chain.	Correct chain slack (See "Pre-Start Checks").
Loud popping and/or grinding noise.	Defective bearing.	Replace bearing.
	Loose drive sprocket set screw.	Tighten sprocket set screws and check key.
	Loose drive chain.	Correct chain slack (See "Pre-Start Checks").
Motor or reducer overheating. *Note: Many motors and reducers can be hot to the touch and still be operating within normal parameters*	Conveyor overloaded.	Check conveyor loading against design parameters.
	Low voltage to motor.	Correct voltage level as stated on motor name plate.
	Reducer lubricant level low.	Fill reducer reservoir.
Conveyor does not achieve desired speed. *Note: Conveyor speed can vary by up to 5% from set speed.*	Overloaded	Compare to design parameters on drawing.

Need Help? Please contact your LEWCO distributor, integrator, or installer. If unsuccessful in resolving, contact LEWCO's Customer Service Department by emailing *customerservice@lewcoinc.com* or by calling *419-625-4014, ext. 4012*. We will need your MODEL and SERIAL NUMBER. See page 11 for details.